PTS500/PTS800/PTS1000
Hydraulic Lift Table

● Operation manual

● Spare parts catalogue

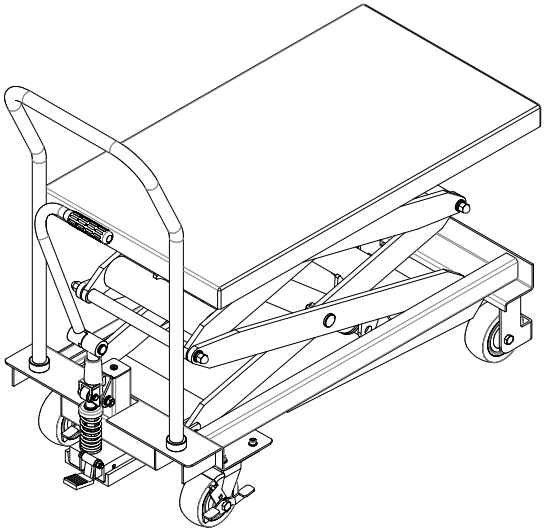

Ⅰ. Main technical parameters：

		PTS500	PTS800	PTS1000	
Capacity	kg	500	800	1000	
Max. lift height	mm	1500	1500	1700	
Min. height of table	mm	360	450	500	
Table size	mm	905X500	1200X610	1200X610	
Handle height	mm	988	988	1016	
Wheel diameter	mm	125	125	150	
Service weight	kg				

Ⅱ. Scope of application：

PTS series table lift truck is a kind of high-lift transportation tool which is applicable for short-distance transportation as well as goods lifting and lowering. Besides, it can also be used as station facilities for workshop.

Ⅲ. Operation condition:

1. Lift table should be operated on solid and flat ground;
2. Operation temperature: -20-40C°.

Ⅳ. Notes(warning)：

1. Read the instruction carefully before operation and get to know the performance and operation requirements of the lift table. And the hydraulic lift table can't be used unless it is authorized.
2. Do not overload the hydraulic lift table and operate it within the rated load. Overloading will cause damage to the hydraulic lift table and human body.
3. It is forbidden for operators to stand or sit on the table to work.
4. Don't put the hands or feet under the lowering table.
5. Please brake the truck when loading goods to prevent it from moving.
6. Off-set loading is forbidden when loading goods, and the goods should be distributed uniformly on the whole table.
7. Loose or unstable goods are not permitted to be loaded.
8. Don't put goods on working table for a long time.
9. The truck can't be moved when goods are being lifted.
10. The truck can only be moved on flat and hard ground, it is forbidden to be used on sloping ground or rugged ground;
11. When putting goods on table which has been hoisted, the weight of goods should be within rated load, and the goods should be loaded lightly. (Safety valve only works in hoisting process, if the truck has been hoisted, and then put overweight goods on it, the safety valve can't work. In this way, the truck may be damaged.)
12. When loading and unloading goods on hoisted table, don't drag goods in cross direction, which

may cause serious off-set loading and make truck turn over.

13. When maintaining and repairing truck, stand bar should be used to support fork arm in order to prevent table from falling (there should be no goods on table), and guarantee the safety in maintenance and repairing.
14. Please operate strictly according to "notes (warning)", otherwise it will bring damage to truck and human body.

Ⅴ. Operation methods：

1. Please step on the foot lever for several times to raise the working table.
2. Please step on the pedal slowly and open the one-way valve to make the working table descend slowly.
3. Please make the brake open before moving the truck.

Ⅵ. Maintenance and upkeep:

It is very important to conduct necessary maintenance and upkeep so as to prolong the service life and safety of the lift table. Please check the lift table before operation according to the following items:

1. Whether there is any distortion and bending of various positions of the lift table.
2. Please check the brake of the truck and the wearing condition of the wheels.
3. Check oil leakage in the hydraulic system.
4. Please add or fill lubricant to each friction surface before daily operation.
5. If there is any failure, the lift table should be repaired at once, then it can be put into use again.

Ⅶ. Assembly method：

The handle and foot lever are dismantled when ex-factory, they might be fixed together by the users when using. The assembly methods are as follows:

Handle installation method: as shown following drawing, fix the handle (F101) to mounting hole of the truck body with bolt (F106), then screw down the bolt with wrench.

Foot lever mounting: insert the foot lever (F41) into the hole, put in the screw (F37) and the Nut (F1) ,then screw down the screw (F37) with wrench.

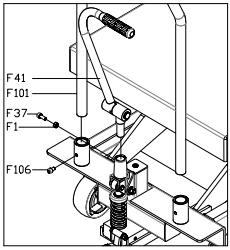

Ⅷ. Spare parts catalogue

1.Pump Spare parts catalogue (PTS500/PTS800/PTS1000)

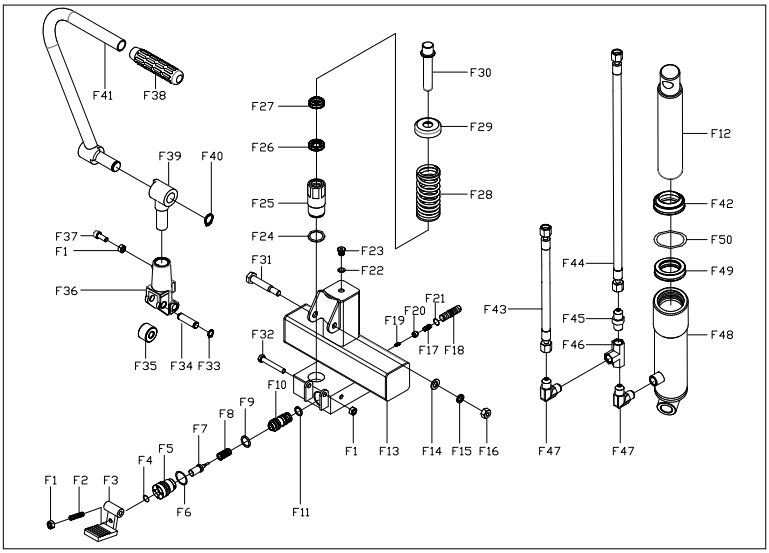

No.	Name	Qty.		No.	Name	Qty.
F1	Nut M8	3		F27	Dust ring	1
F2	Bolt M8X30	1		F28	Big spring	1
F3	Pedal	1		F29	Spring cap	1
F4	O-Ring 2.4X12	1		F30	Pump core	1
F5	Strike pin base	1		F31	Screw	2
F6	O-Ring 3.55X21.2	1		F32	Screw M8X55	1
F7	Strike pin	1		F33	Retaining ring for axle 12	2
F8	Spring	1		F34	Pin	1
F9	O-Ring 2.65X17	1		F35	Small wheel	1
F10	Assembling of small valve	1		F36	Press frame	1
F11	O-Ring 2.65X15	1		F37	Bolt M8X30	1
F12	Piston rod	2		F38	Robber tube	1
F13	Pump base	1		F39	Base of foot lever	1
F14	Washer 10	1		F40	Retaining ring for axle 20	1
F15	Spring washer 10	1		F41	Foot lever	1
F16	Nut 10	1		F42	Dust ring	2
F17	Spring	1		F43	Short pipe	1
F18	Adjust bolt	1		F44	Long pipe	1
F19	Spring	1		F45	Oil pipe joint	1
F20	Small valve base	1		F46	Oil pipe joint	1
F21	O-Ring 1.9X10	1		F47	Oil pipe joint	3
F22	Seal washer 10	1		F48	Cylinder	1
F23	Screw for sealing	1		F49	Seal ring	2
F24	Washer	1		F50	O-ring	2
F25	Pump cylinder	1				
F26	Seal ring					

2. Type PTS500/PTS800 Spare parts catalogue

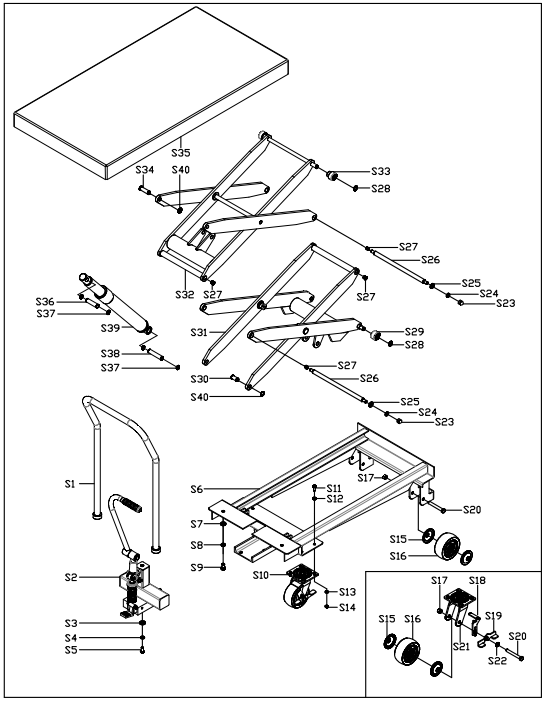

No.	Name	Qty.		No.	Name	Qty.
S1	Handle	1		S21	Base for universal wheel	2
S2	Pump	1		S22	Washer	2
S3	Washer 10	18		S23	Nut	4
S4	Spring washer 10	2		S24	Spring washer	4
S5	Screw M10X20	2		S25	Washer	4
S6	Frame	1		S26	Long shaft	2
S7	Washer 12	2		S27	Bush	8
S8	Spring washer 12	2		S28	Retaining ring for axle	4
S9	Bolt M12X30	2		S29	Pulley	2
S10	Universal wheel	2		S30	Pin	2
S11	Bolt	8		S31	Up scissor	1
S12	Washer	8		S32	Down scissor	1
S13	Washer	8		S33	Pulley	2
S14	Nut	8		S34	Shaft	2
S15	Dust cover	8		S35	Table	1
S16	Wheel	4		S36	Shaft	1
S17	Nut	4		S37	Retaining ring for axle	4
S18	Break pad	2		S38	Shaft	1
S19	Break lever	2		S39	Oil cylinder	1
S20	Screw	4		S40	Retaining ring for axle	4

3. Type PTS1000 Spare parts catalogue

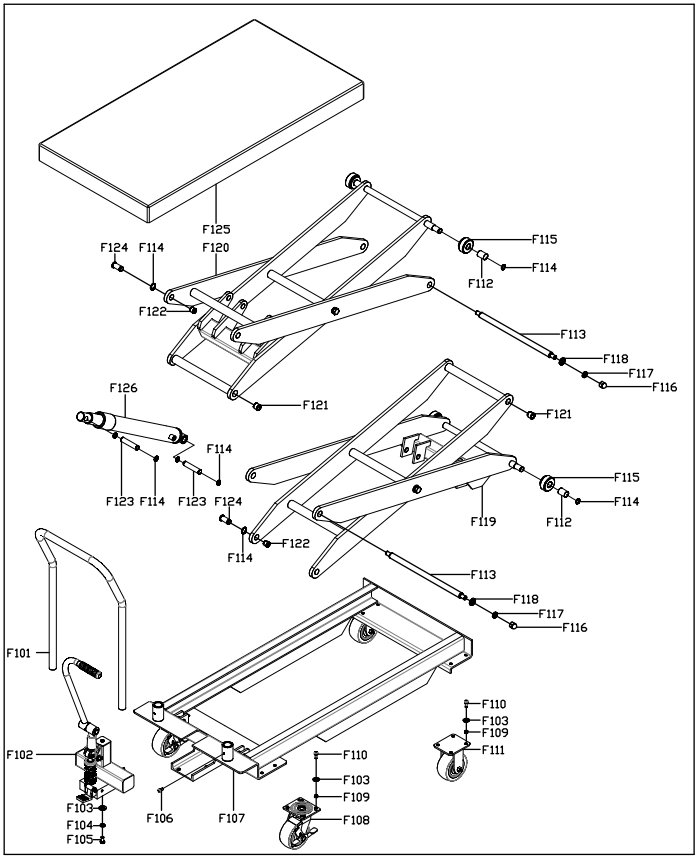

No.	Name	Qty.		No.	Name	Qty.
F101	Handle	1		F116	Nut	4
F102	Pump	1		F117	Spring washer	4
F103	Washer 10	18		F118	Washer	4
F104	Spring washer 10	2		F119	Down scissor	1
F105	Screw M10X20	2		F120	Up scissor	1
F106	Bolt M8X12	2		F121	Bush	4
F107	Frame	1		F122	Bush	4
F108	Universal wheel	2		F123	Shaft	4
F109	Nut M10	16		F124	Pin	4
F110	Bolt M10X25	16		F125	Table	1
F111	Wheel assemble	2		F126	Oil cylinder	2
F112	Bush	4				
F113	Long shaft	2				
F114	Retaining ring for axle 20	12				
F115	Pulley	4				